Heterogeneous Software-Defined Networks: Implementation of a Hybrid Radio-Optical Wireless Network

Muhammad Saad Saud, Helal Chowdhury, and Marcos Katz
Centre for Wireless Communications, University of Oulu, Finland
Email: {muhammad.saud, helal.chowdhury, marcos.katz}@oulu.fi

***Abstract*—Visible light communication (VLC) is an emerging optical wireless technology which has the potential to complement existing radio frequency (RF) communication systems aiming at exploiting the advantages of both networks. The concept of such complementing as hybrid VLC/RF systems is well understood theoretically but not much has been done on practical realization. In this paper, we report implementation details of a hybrid VLC/RF point-to-point system, where two nodes are connected with each other via VLC and RF links. In this implementation, we consider VLC link as primary link therefore it will always be an active link whenever it is available. Nodes are capable of vertical handover between two types of communication links in case of primary (VLC) link failure and restoration. The VLC link state plays important role so we describe a continuous link monitoring protocol and criteria for switching between VLC and RF links. To switch between two links a Linux kernel bonding driver has been used. A simple link monitoring protocol has been implemented for VLC link state and it is passed continuously to bonding driver for decision. Performance of this system has been evaluated for user datagram protocol (UDP) content distribution while handover. Hence, a simple hybrid system capable of handover between VLC and RF links has been achieved.**

***Index Terms*—Bonding, Heterogeneous Network (HetNet), Hybrid, Linux Kernel, Optical Wireless, TUN/TAP, Universal Software Radio Peripheral (USRP), Visible Light Communication (VLC).**

I. Introduction

In recent years, millimeter-wave and optical wireless communications have been widely studied as stand-alone alternative to conventional radio systems as well as complementary technologies to them. One of the reasons for this interest is the spectral congestion taking place in the lower frequency bands of the spectrum due to the explosive increase in the use of advanced mobile services. In this paper, we focus on optical wireless communications, particularly on VLC and its integration to radio-based networks. VLC exploits white light emitting diodes (LEDs) which, in addition to provide room lighting, are data-modulated providing thus means to transmit information wirelessly. The synergy between radio and optical wireless networks is discussed and demonstrated in this paper.

The clear advantages of radio networks have made them omnipresent. Except for some special cases, most of the wireless communications today exploit radio waves in a very large spectrum domain. However, in recent years, VLC and free space optics (FSO) have shown that optical wireless communications have also an important role in many practical cases. We focus here in the complementarity of optical (VLC) and radio wireless technologies, developing an architecture supporting the operation of hybrid wireless networks.

In a hybrid network, a switching mechanism is developed allowing to dynamically select the most appropriate network. A number of different criteria can be exploited to control the switching decision. It can be for instance an operator-driven decision where the operator makes its decision based on spectrum availability, loading situation, sensitivity of the environment, etc. In addition, the decision can be user-driven, where the user decides which network to use depending on personal preferences, cost, service type, etc. Moreover, a channel-based decision can be implemented taken into account the state of the wireless channel. For instance, if the optical channel is physically blocked, the system can switch to a radio-mode. Certainly, these and other switching decision modes can be combined.

A wide range of hybrid system challenges have been considered in literature. Literature shows improvement in capacity performance of heterogeneous network (HetNet) as compared to RF-only counterparts. Up till now most of the work on hybrid systems for VLC has been theoretical. For example in [1], per-node throughput and end-to-end delay of randomly deployed hybrid RF/FSO nodes has been calculated. In this network topology, there are two types of nodes: the ones with RF link only and the ones with RF and additional FSO link. The capacity gain of adding super-nodes (with FSO) in such networks is calculated. In [2], performance of a hybrid wireless local area network (WLAN)-VLC hotspot is studied. Performance of hybrid systems is compared with VLC-only or WLAN-only hotspot cases. Data downloading on move in an indoor environment for single and multi-user cases is considered. In [3], a VLC heterogeneous network model is proposed, which merges VLC and RF network. In this work, VLC is only considered for downlink, and RF channels are used for uplink in all cases, or for downlink where VLC coverage is unavailable. Multi-user mobility scenario is considered in this work. Their simulation results show improvement in capacity performance for VLC HetNet in comparison to RF network. In [4], authors discuss VLC cell formation and frequency reuse patterns. They study hybrid downlink, offering RF-coverage

978-1-5090-4183-1/17/$31.00 ©2017 IEEE

by WLAN and additional support by VLC resources. Authors investigated centralized and distributed resource allocation algorithms for cooperative load balancing. Performance is calculated in terms of throughput and grade of fairness.

There are few implementation oriented works reported in literature for optical or VLC hybrid systems. In [5], implementation details of hybrid network system with optical downlink and radio uplink have been provided. Moreover, in their work, link aggregation based on Linux bonding exploitation is presented. However, switching of VLC with RF using vertical handover is not considered. In this paper we consider practical implementation and characterization details of switching in hybrid VLC/RF system. To the best of our knowledge this is first paper which covers implementation details on handover for hybrid VLC/RF system.

This work is motivated by the key widely identified challenges of 5G networks and beyond. Spectrum shortage will become more pronounced in the future. Moreover, environments where security and privacy become essential will be much more common than today. The same can be stated for interference-sensitive environments. Furthermore, it is expected that conscious and well-informed users will be less tolerant to systems creating radio exposure. Sensitive environments such as hospitals, aircrafts and manufacturing plants, serve as motivating examples for above mentioned scenarios. Furthermore, different kinds of heterogeneous approaches are being considered for increased reliability and robustness for future communication systems. Hybrid radio-optical systems can exploit different diversity approaches (e.g., network selection, network cooperation) to increase the reliability of the wireless connection. The combination of radio and optical wireless systems in a dynamic fashion can be seen as a promising approach to tackle the aforementioned challenges.

The rest of the paper is organized as follows. Section II describes the system overview and general information about implementing such systems. Section III contains specific implementation details of our system. Section IV contains some characterization discussion of the system. Finally, the paper is concluded in Section V.

II. System Overview

We develop here an architecture to support a hybrid optical-radio wireless network. The system is designed to provide UDP content from one node to another in such a way that physical link is switched, for instance in a fail-over situation for primary link i.e., VLC link. Abstraction is essential in this implementation, so that user application can see one network interface at all. It can be inferred from the requirement that to provide one network interface, changes can be made in network, data link, or physical layer. We propose hybrid switching at network layer. TCP/IP network layer model should be modified for this purpose. In Figure 1, the TCP/IP model and modified hybrid network layer model are shown.

The new modified network layer model has an additional network switching sub-layer between the actual network layer of specific interface and the transport layer. For point-to-point

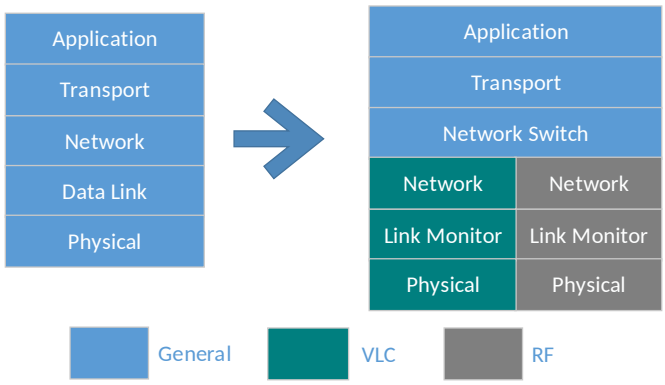

Fig. 1. Modified TCP/IP model: original(left), modified(right).

communication data link layers and its sub-layers i.e., logical link control (LLC) and medium access control (MAC) can be removed completely. Network packets can be directly sent and received from physical (PHY) layer. At network switch sub-layer, the information about link condition is necessary. Typically there are different kinds of link monitoring schemes available by default. Either it is monitoring using auto-routing protocol (ARP) packets generation, or network driver provides link monitoring. In our case, the network driver is a generic driver which does not provide any kind of link monitoring so an additional layer for link monitoring is added. In our system link monitoring is implemented below the network layer.

Switching at network layer is quite suitable for the systems which are meant for distributing UDP or even TCP streaming content. The switching delays can cause pauses in case of TCP or few packets lost in case of UDP. Therefore, these systems are very suitable where fast to-and-fro switching is not needed. The system will be even able to handle these kind of situations by implementing an exponential or linear, etc., wait (back-off) time rise function for switching back to primary link. Hence a vertical handover can be achieved by taking decision on network layer. In this case, switching decision can be taken by monitoring and analysing link through packets.

III. System Implementation Details

In order to implement two hybrid nodes, for point-to-point communication, Linux computers with network(N)-series universal software radio peripherals (USRPs) [6] are used. The VLC link is an extension of work described in [7] and the VLC transmission front-end is described in [8] as trans-conductance configuration. The RF link is generic, any kind of network interface is capable to be a part of the system. Figure 2 shows the setup made with wireless open-access research platforms (WARPs) [9] for RF and USRPs for VLC link resulting in two nodes for hybrid network, meanwhile video UDP content is distributed from one node to another. The following subsections contain more details about implemented system.

A. VLC Link

The VLC link is a modified tunnel example from GNU radio [10]. GNU radio is a free software development toolkit

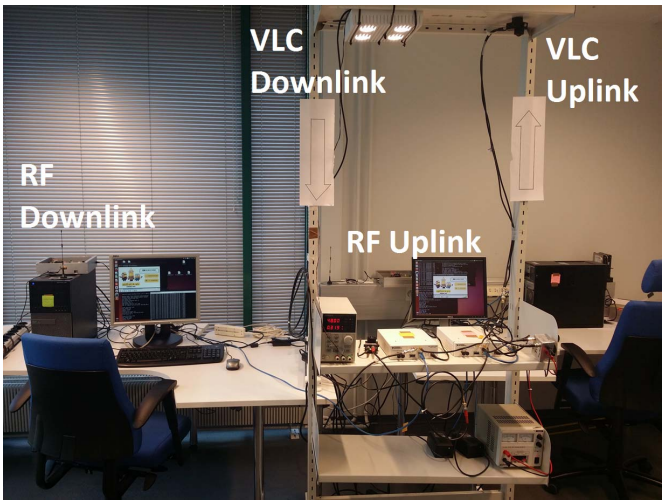

Fig. 2. Picture of implemented system.

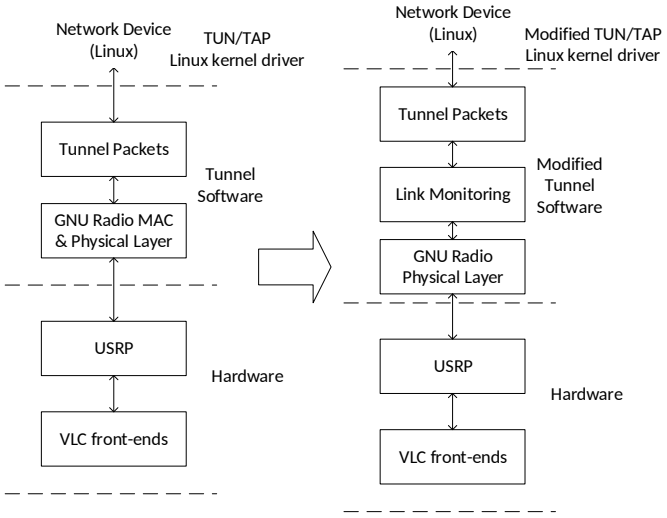

Fig. 3. VLC link modification: original(left), modified(right).

for signal processing in software radios. It provides processing blocks for real-world radio implementations on USRPs. The tunnel example is used for implementing a complete real-world wireless system, which provides a network device to take packets in for USRP and back from USRP to the network device. It uses Linux network tunnel/network tap (TUN/TAP) driver to make a network tunnel. Documentation for Linux drivers is provided in [11]. TUN and TAP are virtual network devices. TUN is a network layer virtual device and TAP is data-link layer virtual device. TUN provides a mechanism for packets of virtual network device to be accessed in user-space application or to copy packets from user-space application to network device buffer. The following sub-sections provide more detail on VLC link.

1) VLC Link Modifications: As mentioned earlier, modifications have been made in the example tunnel software from GNU radio. Figure 3 describes the tunnel software and changes made to it. The original software takes network packets from virtual network device, and forwards them to USRP after implementing carrier sense (CS) MAC and PHY. We implement link monitoring algorithm, in between network packets exchange to virtual network interface and GNU radio PHY. CS MAC is not required in point-to-point implementation of VLC, therefore, it can be removed.

2) Tunnel Software Modification: To understand software modification further, we provide specific details about the changes in this section. Algorithm 1 defines the modified tunnel software. It is a multi-threaded program which takes care of packet reception, transmission and monitoring the link, simultaneously.

Packet transmission is dependent on packet availability to network interface. Software polls to check any available packet. Reception callback function is dependent on packet availability on PHY layer, i.e., it will be called when PHY has a packet. For implementation of link monitoring dummy packets and additional header information is introduced. While transmitting true packets, the first information field added to header is the packet information, i.e., it is true packet. A second information field is added to indicate information about receive (RX) link. By adding this information, the transmitting node is informing the other about its RX link condition or other node's transmission (TX) link. If there is no transmission for a certain TX threshold of time, dummy packets are sent by link monitoring thread. These packets contain information field of dummy packet (to indicate non-true packets, so they are not copied to TUN driver), link information and small (few bytes of) payload. In this implementation packet and link information is two bytes each, remaining payload is 36 bytes making 40 bytes of total dummy packet. If there is no reception for an RX threshold of time, the node consider link failure (in this case its own TX link information is not known as well). Dummy packets ensure two things, namely TX link information feedback and continuous transmission for link detection. If just TX link has failed, a node can know precisely that there is problem in TX link only. This scenario can be helpful in future implementations.

In any case of link failure and restoration TUN/TAP driver is informed. To support this, a modification has been carried out in the kernel driver. Input/output control (IOCTL) system calls are used for information about the link. Another modification is done in get_link $ethtool$ operation of the tunnel driver. It simply returns the value updated by tunnel software for MII monitoring. The bonding driver is forced to use $ethtools$ so $netif_carrier_ok$ function is ignored. Only link-up and link-down state information is necessary for this purpose. In the system, link-back (estimation that link is being restored) state is not considered. The waiting time for the primary network interface to restore back can be implemented in tunnel software separately. This allows fast switching on link failure. Moreover, waiting time after restoration of primary link can be configured in bonding configurations or can be implemented in tunnel software to avoid fast to-and-fro switching.

```
Common Variables: tx_time, rx_time,
                  rx_delay,
                  tx_delay rx_link,
                  tx_link,
                  rx_threshold,
                  tx_threshold,
                  tunfd, moni-
                  tor_thread_delay;
initialization(); // common
    variables
start tx_thread();
start monitor_thread();
initialize rx_callback();
Procedure tx_thread:
    Loop
        // reading tunnel file
           descriptor to find
           payload for USRP
        payload ← read (tunfd);
        if payload then
            packet ← true_Packet +
             rx_link_info + payload;
            send (packet);
            tx_time = current_time();
        end
    EndLoop
EndProcedure
```

```
Procedure rx_callback:
    Loop
        packet ← usrp_packet;
            // payload received
            from usrp
        packet_info, rx_link_info,
         payload ← strip (packet);
        // packet_info: dummy
            or true?,
            rx_link_info for
            other node, payload
        if rx_link_info then
            tx_link ← 1;
        end
        else
            tx_link ← 0;
        end
        if packet_info == true_packet
         then
            tunfd ← write (payload);
        end
        else
            discard (payload);
        end
        rx_time = time();
    EndLoop
EndProcedure
```

```
Procedure monitor_thread:
    Loop
        tx_delay = tx_time -
         current_time();
        rx_delay = rx_time -
         current_time();
        if rx_delay > rx_threshold OR
         tx_link == 0 then
            if Prev (link_state) ≠
             Current (link_state) then
                set and tell driver
                 (link_state, down)
            end
        end
        else
            if Prev (link_state) ≠
             Current (link_state) then
                set and tell driver
                 (link_state, up)
            end
        end
        if tx_delay >tx_threshold then
            send (dummy_packet +
             rx_link_info + dummy
             payload)
        end
        wait (monitor_thread_delay);
    EndLoop
EndProcedure
```

Algorithm 1: Modified tunnel software.

3) VLC PHY and Front-ends: The PHY characteristics are the same as implemented in [7]. We use Gaussian-minimum shift keying (GMSK) modulation. Here, we are not focusing on the PHY rate in hybrid implementation therefore 3.125 and 6.25 Mbps rates have been used for different test scenarios. In one of the two transmitters, LEDs are used with trans-conductance amplifier in front-end. This will be called downlink in our discussion. In reverse link infra-red (IR) LEDs with bias-T circuit has been used which will be called uplink for simplification. It is noteworthy, we use IR link instead of visible light for uplink, we still classify the whole system as VLC because uplink in VLC systems is usually considered to be made of non-visible light or radio. Photo-detectors by Thorlabs Inc., have been used for receiving optical signal, as reported in [7].

B. RF Link

Any generic RF module for Linux can be considered as a RF link. In this work, we have implemented and tested two types of wireless network interfaces. The only requirement is to have an Ethernet interface irrespective of PHY.

In one implementation, we use the same PHY characteristics as VLC, i.e., GMSK with same PHY rates, using USRPs. The tunnel software is used to provide a virtual network device. Any RF daughter-card with respect to desired RF frequencies can be used. In our implementation wide-band WBX daughter-cards in low-power ultra high frequency (UHF) band have been used. Transmit and receive frequencies in downlink are 400 MHz and 350 MHz, respectively. A short range RF link has been established by setting transmit very low on both ends.

In other implemented system, a first generation of WARP has been used with its unmodified orthogonal-frequency division multiplexing (OFDM) reference design. The reference design provides carrier sense multiple access (CSMA) MAC with OFDM PHY in industrial, scientific and medical (ISM) band (around 2.45 GHz) transmission/reception. The WARP OFDM reference design can provide wide range of data rates using for instance binary phase shift keying (BPSK), quadrature phase shift keying (QPSK) or any higher order modulation scheme. We tested the hybrid system with BPSK and 6.45 Mbps throughput.

C. Network Switching

A Linux bonding driver has been used for switching between two network interfaces. The bonding driver creates a master network interface, which enslaves several network

devices to switch or aggregate the links. We switch the links using an active-backup configuration. The VLC interface is set as the primary one, so every time when VLC link is up, it will be re-selected as active link. The RF link, on the other hand is only used when primary link is broken resulting an outage of the VLC coverage.

For link monitoring, there are two options available in bonding driver: auto-routing protocol (ARP) or MII monitoring (MIIMON). ARP monitoring is done by generating ARP packets to the selected network interfaces. The bonding driver can use internally or externally generated ARP packets. It is easy to implement but it can detect only break in link when uplink and downlink fail simultaneously. This assumption can be used for VLC implementation but there can be other scenarios where uplink and downlink do not fail simultaneously. MIIMON method use network driver, in our case it is modified TUN/TAP driver. Link information comes form modified tunnel software. Based on this information bonding switch network and hence a complete hybrid system is achieved. Figure 4 describes the exploited network bonding scheme.

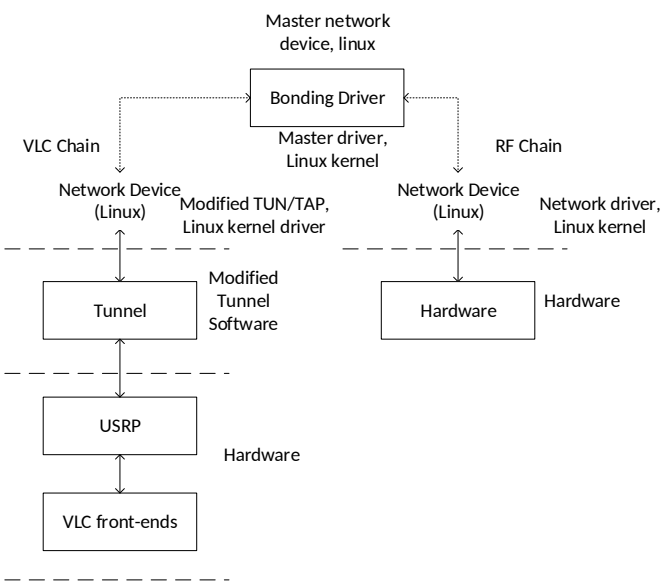

Fig. 4. Network bonding: VLC link (left), RF link (right).

IV. Performance Evaluation and Discussion

In this section we describe few parameters used to characterize the system. In Figure 5, the VLC link performance is presented. Data (PHY) rate of 6.25 Mbps has been set through the tunnel software. Both tunnel softwares, i.e., modified (with link-monitoring) and original (with MAC disabled) yield same maximum throughput, i.e., 5.98 Mbps. This shows, link monitoring network overhead is virtually zero.

Table I shows the packet drop rate while switching from VLC to RF or vice versa. Both types of RF links as described above have been considered. In first case, i.e., USRP, both RF and VLC links are symmetric with respect to PHY rate, i.e., 3.125 Mbps. Datagrams 1470 bytes long were sent at 3

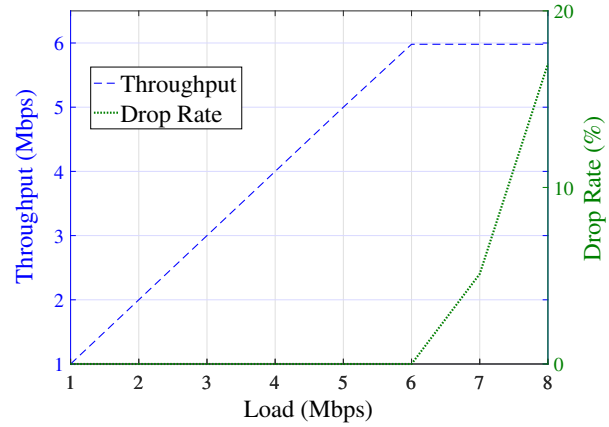

Fig. 5. VLC link performance.

Mbps for 10 seconds, an average packet drop rate is recorded and presented for four conditions. While for the case of RF link implemented via WARP v1 boards, throughput of RF link is 6.45 Mbps and datagram size has been configured as 1400 bytes long to support its reference design. A node is selected to transmit packet to the other one. A failure has been produced by turning off direct current (DC) bias in one of either transmitter front-ends. If failure is in transmission link, it is called downlink failure. Failure in reverse direction link is called uplink failure. If any failure is removed while transmission, it is stated as restoration in the results.

TABLE I
Switching Benchmarks.

VLC Link Failure/Restoration	Packet Drop (USRP & WARP v1)
Downlink Failure	9.36% & 9.35%
Downlink Restore	1.11% & 1%
Uplink Failure	.93% & 1.6%
Uplink Restore	1.13% & .92%

In this setup bonding driver has been configured to update link state after every 150 ms. Link monitoring thread is adding time delay of 100 ms wait in loop. TX threshold is 300 ms and RX threshold is 600 ms. Switching time heavily depends on all of these parameters. Fast switching requires lower latency, therefore all of the above mentioned thresholds should be set according to application requirement. Only failure in downlink yields high packet drop rate as it is directly corresponding to switching time. In uplink failure/restoration and downlink restoration, detection latency does not add up in packet drop rate, rather it is actual switching time taken by bonding driver. As such, even when there is a failure in non-transmission link, packets are being sent and received except for a small time when there is no active link in bonding slaves.

V. Conclusion

An easy-to-implement, flexible test setup for a hybrid VLC/RF switching has been reported in this paper. The setup is flexible, any link or physical layer change can be made

easily. The setup is tested for point-to-point UDP data content distribution and performance is evaluated in terms of packet drop rate. A fast handover is demonstrated on optical link failure. Link failure detection algorithm is symmetric for uplink and downlink. This is useful when uplink and downlink are separated in space/channel characteristics. Future work includes fast switching implementation on data-link, physical layer and consideration of multi-user access scenarios.

ACKNOWLEDGMENT

The authors would like to thank Centre for Wireless Communication (CWC), University of Oulu, Finland for funding this project.

REFERENCES

[1] D. Wang and A. A. Abouzeid, "Throughput and delay analysis for hybrid radio-frequency and free-space-optical (rf/fso) networks," *Wireless Networks*, vol. 17, no. 4, pp. 877–892, 2011. [Online]. Available: http://dx.doi.org/10.1007/s11276-011-0321-3

[2] H. Chowdhury and M. Katz, "Cooperative data download on the move in indoor hybrid (radio-optical) wlan-vlc hotspot coverage," *Transactions on Emerging Telecommunications Technologies*, vol. 25, no. 6, pp. 666–677, 2014. [Online]. Available: http://dx.doi.org/10.1002/ett.2841

[3] X. Bao, J. Dai, and X. Zhu, "Visible light communications heterogeneous network (vlc-hetnet): new model and protocols for mobile scenario," *Wireless Networks*, pp. 1–11, 2016. [Online]. Available: http://dx.doi.org/10.1007/s11276-016-1233-z

[4] X. Li, R. Zhang, and L. Hanzo, "Cooperative load balancing in hybrid visible light communications and wifi," *IEEE Transactions on Communications*, vol. 63, no. 4, pp. 1319–1329, April 2015.

[5] S. Shao, A. Khreishah, M. B. Rahaim, H. Elgala, M. Ayyash, T. D. C. Little, and J. Wu, "An indoor hybrid wifi-vlc internet access system," in *2014 IEEE 11th International Conference on Mobile Ad Hoc and Sensor Systems*, Oct 2014, pp. 569–574.

[6] Ettus research product. Accessed 09.08.2016. [Online]. Available: https://www.ettus.com/product

[7] P. Kamsula, "Design and implementation of a bidirectional visible light communication testbed," diploma thesis, University of Oulu, 2015. [Online]. Available: http://jultika.oulu.fi/files/nbnfioulu-201502141097.pdf

[8] M. S. Saud, M. Wirtanen, H. Chowdhury, T. Hänninen, J. Häkkinen, and M. Katz, "Fpga-based test-bed for visible light communication physical layer study," in *European Wireless 2016; 22nd European Wireless Conference*, May 2016, pp. 1–6.

[9] warpproject.org. Accessed 09.08.2016. [Online]. Available: https://warpproject.org/trac/wiki/OFDMReferenceDesign

[10] Gnu radio. Accessed 09.08.2016. [Online]. Available: http://gnuradio.org/redmine/projects/gnuradio

[11] Linux kernel documentation. Accessed 04.08.2016. [Online]. Available: https://www.kernel.org/doc/Documentation/