Energy Efficient Embedded Systems for LED Lighting Control in Traffic

Zlatko Bundalo
University of Banja Luka
Faculty of Electrical Engineering
Banja Luka, Bosnia and Herzegovina

Momčilo Veljko
Government of Republic of Srpska
Ministry of Finance
Banja Luka, Bosnia and Herzegovina

Dušanka Bundalo
University of Banja Luka
Faculty of Philosophy
Banja Luka, Bosnia and Herzegovina

Goran Kuzmić
University of East Sarajevo
Faculty of Transport and Traffic Engineering
Doboj, Bosnia and Herzegovina

Mirko Sajić
Sberbank a.d. Banja Luka
Banja Luka, Bosnia and Herzegovina

Adnan Ramakić
University of Bihać
Rectorate
Bihać, Bosnia and Herzegovina

Abstract — **The paper considers, proposes and describes possibilities and ways for application, design and implementation of energy efficient microprocessor based embedded systems for LED lighting control in the traffic. Using LED lighting technology and appropriate designed embedded systems it is possible to implement very efficient and smart systems for very wide range of applications in the traffic. This type of systems can be widely used in many places in the traffic where there is needed quality lighting and low energy consumption. Application of such systems enables to increase energy consumption efficiency, quality of lighting and security of traffic and to decrease total costs for the lighting. Way of design and use of such digital embedded system to effectively increase functionality and efficiency of lighting in the traffic is proposed and described. It is also proposed and described one practically designed and implemented simple and universal embedded system for LED lighting control for many applications in the traffic.**

Keywords – LED technology; LED lighting; energy efficiency; microprocessor based embedded systems; lighting control in traffic.

I. INTRODUCTION

With the aim to save energy LED (Light Emitting Diode) technology is more and more used for lighting in many purposes and applications. Such situation is also in lighting in the traffic, in lighting of streets, squares, roads, crossroads, tunnels and other areas and objects in the traffic. There are many advantages of LED technology. Costs of LED lighting components are also permanently decreasing [1-5].

Traditional systems for lighting of traffic roads are mainly inefficient and no optimized. Therefore, they give many possibilities for saving of energy and for improving of their functionality. Such lighting can be replaced by LED lighting that has low energy consumption, high quality and low maintenance costs. Advantages of LED lighting in the traffic are also resistance to effects of vibrations and wind, and good operation in extreme environmental conditions.

Using embedded systems for control of LED lighting it can be achieved additional savings and functionalities. Such systems enable control of public and traffic lighting according to the needs of concrete area or object that was lighten. That enables significant savings in electric energy consumption with variable dynamics of lighting during a day, such it is case in the traffic.

Possibilities and ways for implementation of LED lighting and its application in the traffic are described in this paper. Way of control of (lamps) in such systems with the aim to increase quality of lighting and decrease energy consumption is considered. One practically designed and implemented simpler microcontroller based embedded system for control of LED lighting in the traffic with increased energy efficiency is described. That system can be used for lighting of different traffic areas and objects, for lighting of traffic roads, and for control of public (street) lighting.

II. LED LIGHTING TECHNOLOGY IN TRAFFIC

Light Emitting Diode (LED) is semiconductor diode that emits light when is directly polarised. It can be obtained wide spectra of light colours depending on used semiconductor materials. LED elements (lamps) that emit white light are used for the lighting [2-5].

One of the most significant applications of LED technology is the lighting. LED lighting elements are used in almost all areas of lighting: houses, offices, hospitals, street lighting, lighting in the traffic, ambient lighting of objects and areas, etc. [2-5]. LED technology is also used in motor vehicles for implementation of signalization lights, intelligent adaptive lights and internal ambient lighting.

The main advantages of LED technology application in lighting are: long period of life, energy efficiency, emitting of

978-1-7281-1740-9/19/$31.00 ©2019 IEEE

light of needed colour, short response time, small dimensions, simple control of light intensity, operation in wide temperature range, small light pollution, small pollution of the environment, reduced maintenance costs and waste disposal costs. Basic disadvantages of LED technology in lighting are: high price and significant investments before exploitation. But, that costs are very quickly recovering through savings in energy consumption and maintenance during exploitation. Also, the price of LED elements is permanently decreasing.

Adequate lighting of the traffic infrastructure, such as are bridges, motor high ways, road crossings and tunnels, is very important since that are the most unsecure areas for participants in the traffic. Also, heavy traffic accidents are most often happening during the night. Application of LED lighting enables to be reduced and solved that problems [2-5].

Basic task of lighting in the traffic is that creates such conditions of visibility to the participants in the traffic (drivers and pedestrians) that will enable safe flow of traffic during the twilight, the night and the darkness. Such lighting of traffic roads enables decreasing of number of traffic accidents, decreasing of crime rate (robberies, stealing of vehicles, etc.), higher speed of vehicles movement, increasing of traffic bandwidth, safe movements of pedestrians, greater use of traffic network during the night. Lighting in the traffic should be primarily placed in the zones of increased danger such as are road sections with appropriate objects, bridges, tunnels, boarder crossings, traffic intersections. It is also needed to provide high quality lighting of traffic roads outside and inside of populated areas [2-5].

Using intelligent systems for control of lighting it can be achieved additional savings. Intelligent control of lighting uses different types of sensors and avoids using of lighting when is not needed. The simplest way of lighting control in the traffic is autonomous control where the control unit is integrated into the LED lamp driver. The lamp itself turns on, turns off and controls light intensity according to the defined instructions. In remote systems of lighting control in traffic the control is performed by one central control unit, remotely. Communication of the control unit and LED lamps can be performed using: power line, wireless communication or using combination of this two communication types.

III. Embedded Systems in LED Lighting Control in Traffic

Using embedded microprocessor based systems it is possible efficient control of LED elements and reduction of total energy consumption in lighting in the traffic. By such systems it is possible very simply to turn on, turn off or decrease light intensity of individual or of groups of LED lamps according to the need in every time moment. Also, operational condition of each individual lamp, its energy consumption and information about failures can be very easily collected and saved in one central computer together with data about exact time and location.

Control and optimization of lighting using embedded systems enables controlled decreasing of intensity of light emitted by each LED lamp where needed quality of lighting is also kept and achieved. Such systems enable also different levels of automation in systems for control of public lighting. Such systems with the best quality enable also complete review and record of lamps, daily reports about failures, checking of achieved savings and optimized planning of maintenance of lighting system.

IV. Design of Energy Efficient Embedded System for LED Lighting Control in Traffic

Designed microcontroller based embedded system of LED lighting is intended for lighting in the traffic and for street lighting. The lighting is turned on in the evening when the visibility decreases below a certain limit and is turned off in the morning when the visibility increases to that limit. Also, the lighting operates with reduced intensity in the night period when is decreased need for visibility. The lighting operates with the intensity of 80% in the time period when the movement of vehicles and pedestrians was reduced. The lighting operates with the intensity of 60% in the time period when it can be assumed that there will not be movement in the observed area. The system in every moment has information about exact time and measures level of daily light in moments when it is needed. Also, there is possibility for adjustment of time intervals where the lighting intensity will be reduced.

A special circuit for driving of LED elements that has one external signal for control of lighting was used for implementation of the system. That external signal is generated and brought from the microcontroller. Circuit IS31LT3910 and microcontroller AT89S8253 were used in the system design [6]. Microcontroller controls the lighting and performs turning on, turning off, determination of needed intensity of light and all other needed activities. For adequate control it was also used photo resistor as sensor of light and real time clock circuit with battery supply. Tasters (keys) and LCD display are also connected with the microcontroller. It enables manual setting and monitoring of some parameters.

Stage for driving of LED elements provides needed current for their operation (Fig. 1). The main part of the stage is circuit IS31LT3910 that controls the stage. Frequency of PWM signal generated by microcontroller and brought to that circuit regulates current through the LED elements. 25 white LED lamps EF12W1EAF were used for the lighting.

Needed frequency of PWM signal for circuit IS31LT3910 is achieved by defining time T_{OFF}, while time T_{ON} is regulated on the base of maximal value of current. T_{OFF} is time of duration of low level of PWM signal. Signal CS of that circuit was used for detection of peak current, generation of low level on output signal GATE and turning off transistor Q_2, obtaining such protection of the stage and LED lamps. Circuit IS31LT3910 has two input signals for control of lighting. Signal LD can be used for the control by level of analog signal. Signal PWMD can be used for the control by PWM signal. The designed system controls lighting by PWM signal generated and brought from microcontroller. LD signal was not used for control. It was used for realization of temperature protection by NTC resistor located with LED elements (Fig. 1).

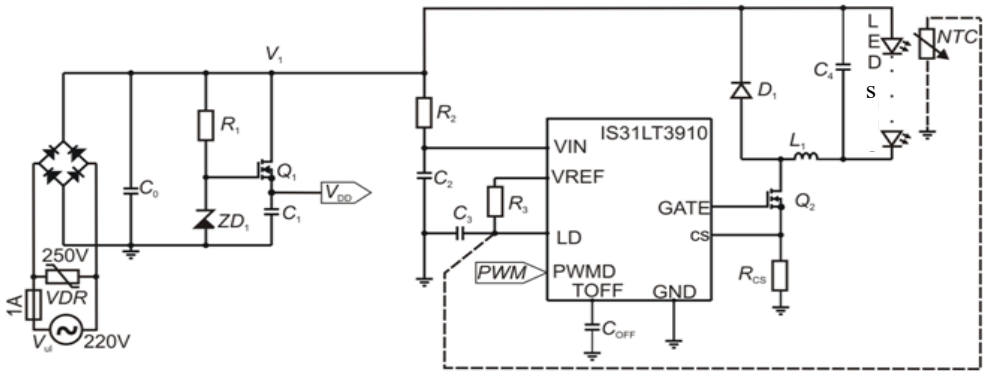

Figure 1. Scheme of power supply and of LED elements driving stage

Central part of the system is microcontroller AT89S8253 (Fig. 2). It is sufficient internal program memory for the system, so signal $\overline{EA}$ was connected to supply voltage and signals ALE and $\overline{PSEN}$ were not used. The system used three tasters (keys) and LCD display LM016L with two rows by 16 characters.

Circuit DS1338C-3 was used as external real time clock. It has battery supply and operates also when there is no main electrical supply. It can to memorize and save up to 56 bytes of data. It is used for storage of data about the start and the end of time intervals when lighting should operate with reduced intensity. The I^2C interface was used for communication with microcontroller. Output signal SQW/OUT was used for generation of impulses with frequency of 1Hz. Those impulses were used for realization of blinking of digits on LED display during entering appropriate parameter.

Light dependent resistor (LDR) A9060 31 was used as light sensor. Its current is increasing (resistance is decreasing) with increasing of intensity of light. One resistor (R_4) was connected in series with the sensor. Voltage on that resistor is measured for detection of level of light. Analog to digital (A/D) convertor and circuit MCP3204 was used for conversion of that voltage into digital form. That voltage is brought on one of inputs for sampling of analog signal. Communication with microcontroller was performed using SPI interface. That circuit converts analog voltage value into 12-bit digital word.

Voltage dependent resistor (VDR) was connected between input supply lines to protect the system against too high voltage and to limit the input supply voltage. The voltage was limited on 250V of effective value and the resistor V250LA10P was used for that purpose..

Programming language microC was used for development and implementation of the system program. The program was designed and realized modularly with more created functions grouped in five libraries. Interrupt of timer 2 was used and to it was given highest priority (3).

After starting of the program it is performed initialization of basic parameters. Then the stored times of start and of end of night modes of lighting are read from circuit DS1338C-3. The control loop is entered after that. In the loop first time and date from circuit DS1338C-3 are read and are shown on display. The next step is checking was pressed any of tasters (keys). If it was pressed any key then is performed one of next functions: adjusting of real time and date or adjusting of time intervals of operation modes and showing it on display. During adjusting of some parameter its value is blinking on display with frequency of 1 HZ synchronised with signal SQW/OUT of circuit DS1338C-3.

For quality operation of the lighting it is important to know time of day and that is determined in the next step. Except of parts of day when lighting is certainly not needed or should to function, there are also transient times when it could but not have to function, according to level of visibility. Those transient times appear around of moments of setting and of rising of the Sun. In those moments it is tested using sensor of light is level of light under or over certain limit. According to that the lighting is turned on in the evening and turned off in the morning. Reading of the sensor is performed two times in the interval of 5 seconds to avoid accidental turning off of the lighting. Such is made conclusion about need of turning on or turning off of the lighting. As the times of rising and of setting of the Sun are changing during the year it was used conversion look-up table with stored values of that times for region of Banja Luka.

Next step is to determine the needed mode of operation. Mode of operation is determined by comparison of actual time with the times defined for individual modes. If actual time is inside of defined time of some mode then that mode of operation is activated. There are three operation modes of the lighting: mode 0 where the lighting operates with 100% of intensity, mode 1 where lighting operates with intensity of 80% and mode 2 where intensity is 60%. Modes 1 and 2 have defined duration, while mode 0 is active in moments of lighting operation that are out of intervals of modes 1 and 2.

After determination should the lighting be turned on and in what operation mode it is performed generation of PWM signal for control of the lighting. When signal PWM has value of logical 0 then the lighting is turned off and when PWM has value of logical 1 then the lighting is turned on. In the modes 1 and 2 that signal is generated using interrupt of timer 2 and has filling rate of 80% and 60%, respectively. Then the signal PWM has repeating frequency of 5 kHz. During generation of PWM signal timer 2 operates as counter of clock impulses in reload mode with enabling of interrupt. The interrupt appears whenever is needed to change logic level of PWM signal.

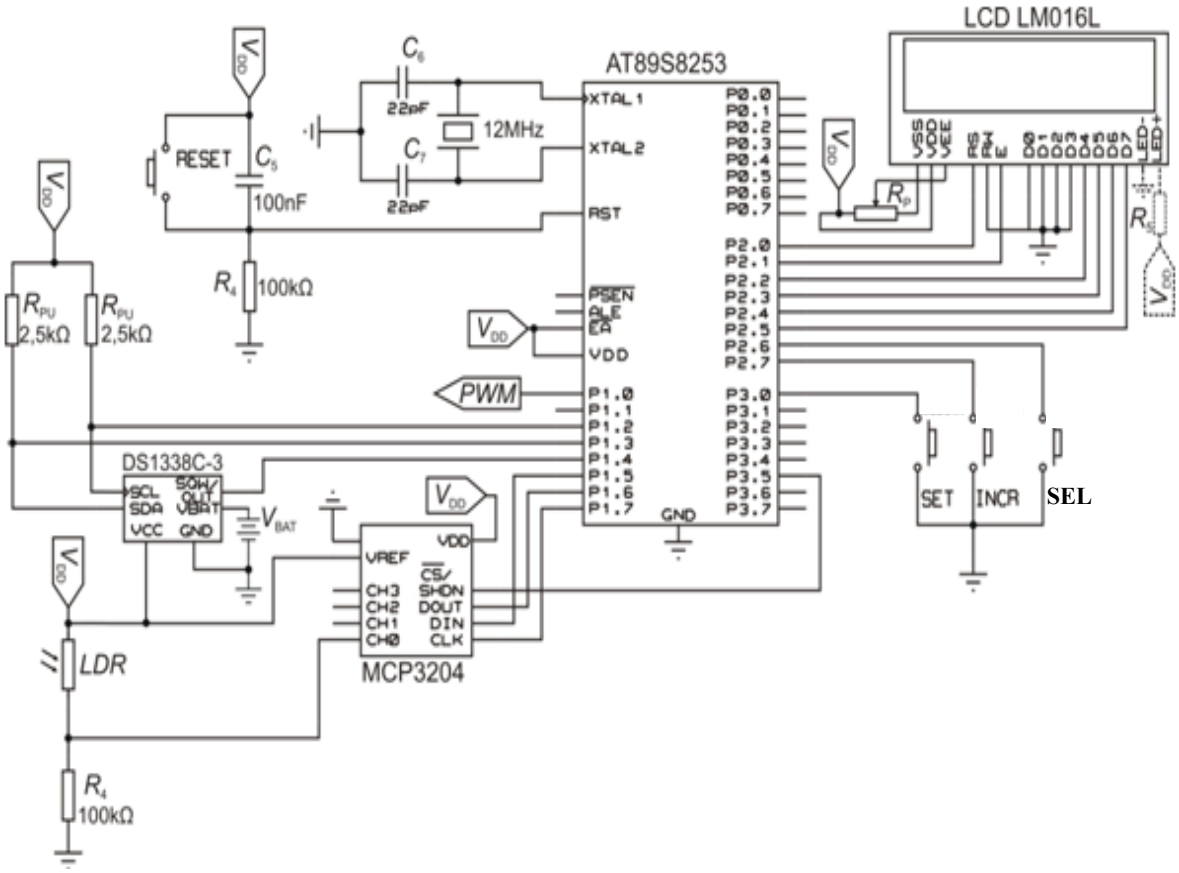

Figure 2. Scheme of central part of implemented system

When the lighting is turned on then on the display is shown mode in what it operates and with what intensity.

Complete the control process is repeating from the step with reading time from external real time clock.

V. CONCLUSION

It is clear that the LED technology is the best technology for lighting in the traffic. The most important advantages of LED lighting are small energy consumption, high lighting quality, simple way of control of lighting. Additional energy savings, but also additional lighting quality, can be achieved if microprocessor based embedded systems are used for control of LED lighting. The optimal solution for that is using microcontrollers since they are inexpensive and contain most number of all needed components. Such designed and implemented systems give possibility to realize also some advanced options as is realization and selection of different modes of operation of LED lighting. Because of long life period LED lighting significantly influences also on reduction of costs for maintenance of lighting in traffic.

The designed and described embedded system for LED lighting is simple, chip and optimized for application in the traffic. Its energy efficiency was achieved using LED elements (LED lamps), using adequate way of control of LED elements by microcontroller based embedded system and by optimized design of the embedded system such that consume minimal electrical energy. Energy consumption of this system is less than 15% of energy consumption of traditional lighting system in the traffic. Such system can be used for lighting in many areas of the traffic, lighting of streets, squares, roads, crossroads, road crossings, for public lighting. It was designed to operate as automatic and autonomous system. But, it can be easily adapted for operation in more complex distributed system of LED lighting connected with some central control unit.

REFERENCES

[1] G. Kuzmic, D. Bundalo, Z. Bundalo, D. Pasalic, "Application of LED lighting technology with the aim of increasing lighting quality and reduction of energy consumption", Proceedings of Conference INFOTEH, Jahorina, Bosnia and Herzegovina, v. 10, ref. E-VI-1, pp. 846-850, 2011. (in Serbian),

[2] J. Cho, J. H. Park, J. K. Kim, E. F. Schubert, „White light-emitting diodes: History, progress, and future," *Laser & Photonics Reviews, v.* 11, no. 2, 2017.

[3] „Adding Intelligence to Lighting Applications – LED Lighting Design Guide", Microchip Technology Inc. 2010,

[4] „LED lighting – Solutions guide", MAXIM Integrated products, 2011,

[5] S. P. Lau, G. V.Merrett, A. S.Weddel, N. M.White, „A traffic-aware street lighting scheme for Smart Cities using autonomous networked sensors," *Electronics and Computer Science,* 2015.

[6] "8-bit Microcontroller with 12 Kbyte Flash – AT89S8253", Atmel Corporation, 2010.