Design of Smart Helmet for Accident Avoidance

Jesudoss A, Vybhavi R and Anusha B

***Abstract*—Road accidents are increasing day by day because the riders are not using the helmet and due to consumption of alcohol. In today's world, huge numbers of people are dying on road accidents. By using smart helmet, the accidents can be detected. The main target of the project is designing a smart helmet for accident avoidance and alcohol detection. The IR sensor checks if the person is wearing the helmet or not. The Gas sensor recognizes the alcoholic substance in the rider's breath. If the person is not wearing the helmet and if he consumes alcohol, the bike will not start. If there is no sign of alcoholic substance present and helmet is used, then only the bike will start. At the point when the rider met with an accident, the sensor recognizes the condition of the motorbike and reports the accident. Then the GPS in the bike will send the location of the accident place to main server of the nearby hospitals.**

***Index Terms*—Accident Detection, Alcohol Detection, Internet of Things, IR sensor and Smart Helmet.**

I. Introduction

THE bike accidents are increasing step by step and lead to the loss of numerous lives. By using helmet can decrease the probability of bike accidents. By estimating these days 1.2 million people are losing their valuable lives in road accidents. In day-to-day life, there are many accidents occurring for which some solution must be found as soon as the incident occurs. The death rate is not decreasing even when the hospitals are providing ambulance services. So, to overcome all these problems, there are two important criteria verified by smart helmet before the bike starts. First, check whether the user is using a helmet and not just keeping it. It can be sensed by using the IR sensor. Second, there must be no alcoholic substance present in user's breath. It can be noticed by using gas sensor. It is placed in the helmet. When the person is highly consumed the alcohol, the gas sensor will sense the riders breathe to detect the amount of alcohol content. Third, when a person meets with an accident, If the accident is major then the sensor will identify the bike's condition and the person's location will be sent to nearby hospitals through GPS to the main server of the hospital. If the accident is minor, there is a button present in the bike should be pressed by the person. This intimates that the person is not injured, and the bike will start.

Jesudoss A, Assistant Professor, Dept. of CSE, Sathyabama Institute of Science and Technology, Chennai
Vybhavi R and Anusha B are UG Students, Dept. of CSE, Sathyabama Institute of Science and Technology, Chennai
(email: jesudossas@gmail.com vybhav.ramisetty375@gmail.com, banushareddy1997@gmail.com)

The helmet with the sensors for accident prevention, the microcontroller which is used in the project is Peripheral Interface Controller (PIC). The PIC control board consists of microchip, Power supply, Capacitor, Registers, LCD for displaying the values, and pins to connect the sensors.

Vibration sensors are used when the bike is hitting more which relates to microcontroller board. So, when the rider collides and the rider's helmet hits the ground, the vibration sensor senses the condition and after that controller extracts GPS information and this information passes message to nearby hospital. During an ONEISS (Online National Electronic Injury Surveillance System) review led by the Department of Health, it was discovered that 90% of the bikes rider killed in accidents were not wearing a helmet at the season of effect. This can be intended to moderate these issues and subsequently the related losses by guaranteeing that the rider will wear the helmet all the time among his/her ride.

The helmet can identify an accident, utilizing the locally available vibration sensor. A locally available gas sensor additionally examines the breath of the rider to distinguish if the present level is over the estimate limit. Mems sensor is using to avoid rash driving. It detects the motion of the handle and it is based on the handle bar control of the vehicle.

The rest of the paper demonstrated as below. Section II has related work of the paper. The existing and proposed works are described in Section III and IV respectively. Section V and VI discuss about the implementation and results respectively. At last, Section VII concludes the paper with conclusion.

II. Related Work

Dr. Himadri Nath Saha proposes a mechanism by using the parameters such as flex sensor, breathe analyzer, impact sensor, Bluetooth for accident detection and shows how important the alarm by using SVM [1]. Ms. Rekha. M, Ms. Bharathi. K proposes the technology detects amount of alcohol in blood if the limit is above the legal limit then the vehicle won't move [2]. P. Tharangai Thamil, S.Vanitha proposes to determine the detection of rash driving using accelerometer and sensors [3]. Amrutha Madhusan proposes the system which aims at reducing the loss of people lives in road accidents and performs such tasks as accident detecting and sending of the location to the nearby hospital [4]. Prabha project provides an accelerometer which is used in a car alerting application so the risky driving can be detected [5]. Aboli Ravindra Wakure proposes the system with the accelerometer sensor for car security system. Also proposed about the air bags and alcohol sensor [6].

978-1-5386-7595-3/19/$31.00 ©2019 IEEE

HemangiS. Ahire, Madhuri B. Kamble proposes a system to detection of accident by using GPS tracking system and RF transmitter [7]. Akansha Rajput proposes the system which requires authenticating the finger prints of the rider and it makes sure that the person wears the helmet or not [8]. K.Praveen Kumar reports about a keen head protector which makes the bike driving more secure [9]. Sudharsana Vijayan proposes the framework which checks whether the individual is using the helmet and has non-alcoholic breath while driving there is a transmitter in the helmet and a percipient in the bike [10]. Bhandari Prachi implements a system of automatic accident detection. A sensor unit and GPS, GSM unit placed in the vehicle which detects the accident and pass the location to the main server of nearby hospitals [11]. Adnan Nasir implemented two ultrasonic sensors for identifying the accident. The ultrasonic sensor calculates the distance between the transferring and receiving sound waves [12].

Mohd Khairul Afiq Mohd Rasli proved that everyone should wear the helmet and Seat belt so, it decreases the death rate. If the Person crosses the speed limit, then the alert will be given to the rider [13]. B. Shyam proposed the system to protect from the injury of accidents is to give immediate assistance of the accident occurrence [14]. Prajitha Prasad A proposes the everyone should wear a helmet otherwise the bike will not begin by using the flex sensor the presence of helmet will be detected [15]. Hemendra Kumar proposed the system which ensures that bike will not when the driver doesn't wear the helmet and over consumed alcohol [16]. M. K. A. Mohd Rasli has proposed to improve the motorcycle's rider safety. A BLDC Fan and Force Sensing Resistor (FSR) are used for the detection of the motorcycle's speed [17]. Yovan Felix et al proposed Traffic Management Systm in which license plate of the vehicle is recognized using IoT sensors [18]. Nitin Agarwal proposes design of Smart helmet for rider's safety with radio frequency link. When a user wear helmet then a RF signal release from the transmitter [19]. Pooja Dagade proposes a project consists of vehicle unit, ambulance unit, hospital unit. These units will coordinate with each other. The main objective is to detect the accident and sending the notification to the ambulance [20]. Aravinda B proposed a solution for the accident problem is warning the driver about the opposite side coming vehicle [21]. Jesudoss et al proposed a cloud-based scheme for healthcare information systems. This work provides a secure framework for storing information in a secured way [22].

III. Existing System

An important part of the accidents happens because the individual was either not wearing a helmet, or the accident was not revealed in time, or the person couldn't be safe in view of the late induction to an emergency clinic, or on the grounds that the person was riding while smashed.

Sensors distributed, Wi-Fi empowered processor, and computing foundations are used for building the structure. The accident discovery is finished utilizing the accelerometer and the accident warning is finished utilizing the customer and server-based framework where the microcontroller is the customer and the server is an online administration. At the point when an accident happens, the related subtleties are sent to the crisis contacts by using a cloud-based administration. The disadvantages of existing system are 1) Less exactness in the location of accidents, and 2) There is no framework to check if the rider is wearing the helmet or not.

IV. Proposed System

In the proposed system, the sensors are used such as IR sensor, load sensor, vibration sensor and gas sensor, mems. The gas sensor detects the measure of liquor consists in the breath of a person wearing the helmet.

The Alcohol recognition sensors connected with the helmet in distinguish the Alcohol detection. MEMS based handle bar control of the vehicle. The Vibration sensor is used to detect any accident. Load checking to recognize the load of the vehicle and alongside the sensor to locate the quantity of individuals travelling in the bike. These parameters are used to keep away from accidents in bike. The Pin diagram is shown in Fig. 1.

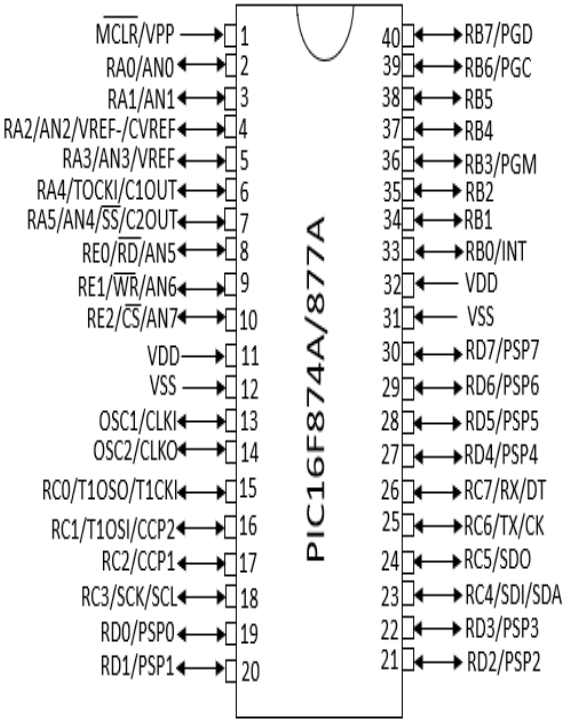

Fig. 1. Pin Diagram

A. User/Driver

If the User/Driver needs to communicate with the server and maintain a strategic distance from the accident, they need to make a record with the server. To make a record with the server, the client needs to give their details like username, secret phrase, date of birth, phone number, and other vehicle data. This data is put away in the server for future reason.

B. Server

A server is a PC program hurrying to serve all the requests of different programs of the "customers". Along with this, the

"server" plays out some computational task undertaking on behalf of "customers". The customers either keep running on a similar PC or interface through the system. Here the server will store the entire client's data in the database. Also, the server will check all the user access. The server will also store the client to get details in the database. The proposed block diagram of smart helmet is shown in Fig. 2.

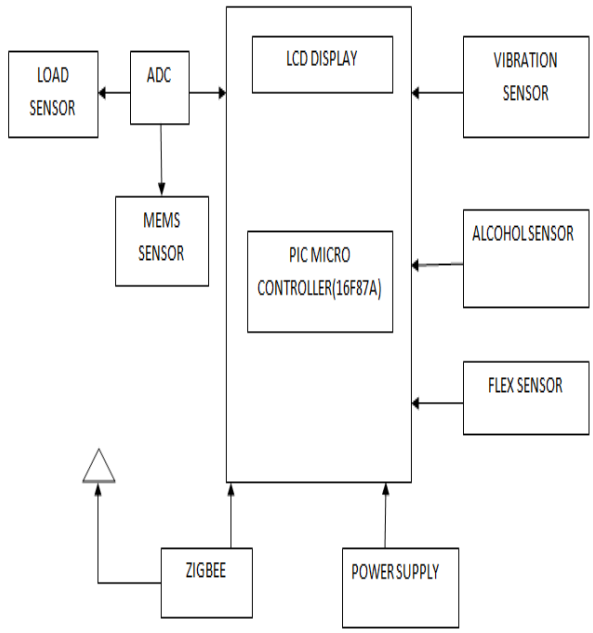

Fig. 2. Proposed block diagram of smart helmet

C. Load Monitoring

In this module, distinguish the number of individual travels on bike, for that we will utilize load cell, if load cell identify weight more than enlisted weight control

D. Alchohol Detection

At the point when the person is riding the bike with liquor utilization, gas sensor will sense and passes the flag to the server. With the goal that we can avoid the alcoholic and drive accidents. The key unit of this is a "gas sensor". On the off chance that the person on the bike has devoured alcohol, it is recognized by the sensor. Microcontroller is the core of this task. It is the CPU of the total circuit. Microcontroller communicates with the server. Fundamental preferred standpoint of this Alcohol Detection System in Cars gives a programmed wellbeing framework to autos and different vehicles too.

The gas sensor is fitted in the base of the helmet which is close to the mouth. It can distinguish the alcohol content in one's breath if the client inhales on it. The sensor is fitted so that the client will dependably take in it. In this case, that the alcohol content recognized, causes the computerized give infix of the sensor to wind up HIGH, the client is told and cautioned to not drive the bike.

E. Accident Detection

In gradually number of accidents is made while driving the bike or other vehicles, the increasing number of accidents are made by bike just, here we recognize the accident and pass message to the hospitals. Vibration sensor is utilized to recognize the accident, when sensor identifies solid vibration a warning will send to the police.

Accident Detection requires a pre-aligned helmet. The gadget always screens the simple yield estimations of the accelerometer, just as the effect sensor fitted to the outside of the helmet. The effect sensors are then checked. On the off chance that the effect sensors report a sudden "affect". In the case of that the client does not press the caution in 30 seconds, it is considered as a genuine accident.

Hardware specification:
HDD : 500GB
RAM : 2-4GB
Processor : Core i3, i5
Embedded kit : PIC board (16F84a), Sensors

Software specification:
Operating system: Windows 7/8.1
Languages : Java
Data Base : Mysql
IDE : Net Beans 8.2

V. IMPLEMENTATION

A. Gas Sensor

This module uses a Gas sensor which is called as breath analyzer. It is a low-cost semiconductor sensor and can detect the proximity of liquor gases with the concentrations from 0.05 mg/L to 10 mg/L. It is an analog input. It contains 3 ports such as VCC, GND, and A0. The VCC pin of the sensor is interfaced with the 5V pin of the microcontroller. The GND of the sensor is connected to the ground of the microcontroller. The Gas Sensor is shown in below Fig. 3.

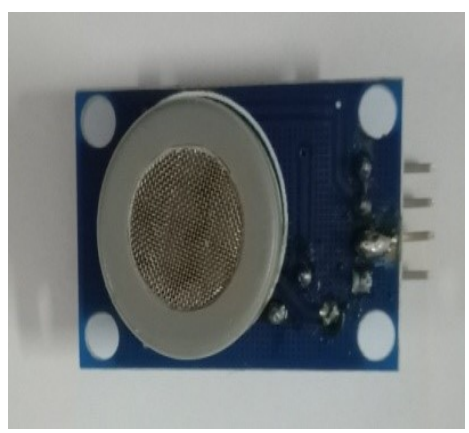

Fig. 3. Gas Sensor

B. Vibration Sensor

Vibration Sensor can distinguish whether any impact development or vibration occurs. It yields a low beat flag when vibration is recognized. Vibration sensor is the digital input device. Inside the sensor comparison circuit is present which is used to give voltage to the controller. The VCC is pin of the sensor is interfaced with 5V pin of the microcontroller. The ground is interfaced with the ground of the microcontroller. The A0 pin of the sensor is interfaced with the RA1 pin of the microcontroller. It identifies the vibration in the range of0-1023. The Vibration Sensor is shown in below Fig. 4.

Fig. 4. Vibration sensor

C. Zigbee

ZigBee is an open communication protocol. The range of the ZigBee is 15-20 meters. It is a wireless frequency protocol. The ZigBee is shown in below Fig. 5.

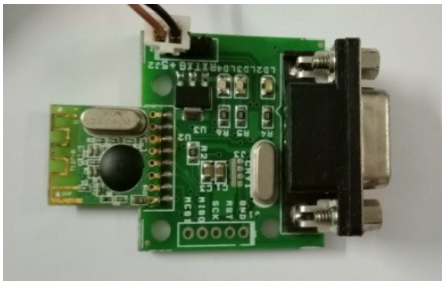

Fig. 5. ZigBee

D. IR Sensor

IR sensor is used to examine whether the person is wearing the helmet or not. IR sensor is the digital input device. Normally, it consists of the values as 0's and 1's. Its range is up to 5V. The IR Sensor is shown in below Fig. 6.

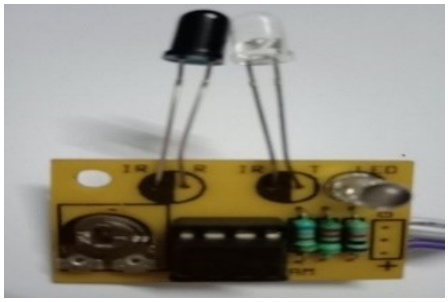

Fig. 6. IR sensor

E. MEMS

MEMS are based on the handle bar control of the vehicle. It is an Analog input device. It contains 3 planes such as x, y, z. And, it contains ground, voltage and ST. Here 5v pin of the sensor is interfaced with the 5v pin of the microcontroller. X plane is interfaced with the ground and Y plane is interfaced with the RA2 of the microcontroller. The Mems is shown in below Fig. 7.

Fig. 7. Mems

F. Load Sensor

Load sensor is used to detect number of people travel on bike. It is an analog input device. The ground is interfaced with the ground of the microcontroller, ADC is interfaced with RA3 pin of the microcontroller. The load Sensor is shown in below Fig. 8.

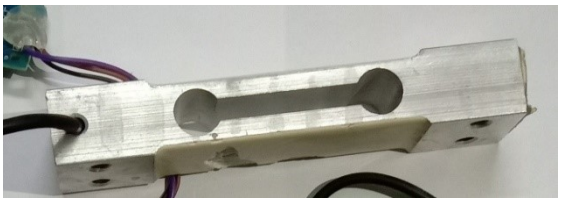

Fig. 8. Load Sensor

VI. RESULTS

The Sensors are interfaced with the PIC microcontroller through the wires. When a person consumes alcohol the gas sensor will detect and display the alcohol content of the person on the LED display. The entire project snapshot is shown in below Fig. 9.

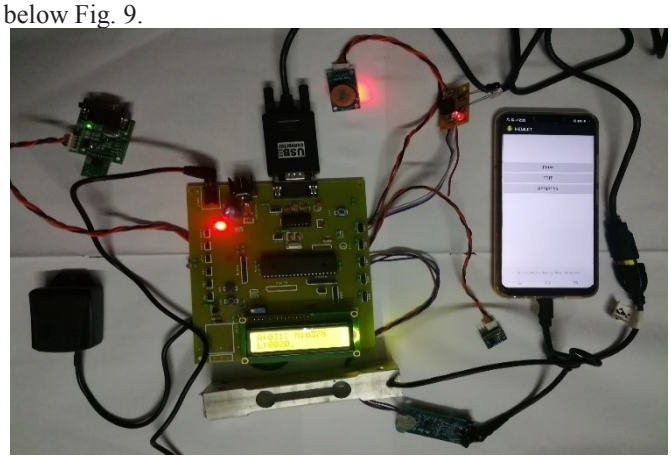

Fig. 9. Snapshot of the project

By giving the load the load sensor will detect and give the value of the load limit in the display. When an accident occurs the vibration sensor, sense the bike condition and send the information to the hospital through GPS by using latitude and longitude values. When the helmet not worn, the IR sensor will notify to wear the helmet. The mems sensor detects when the case of rash driving and charge the amount of the person from his bank account.

A. Merits Compared To Existing Approach

1. Alcohol sensor is to monitor the alcohol consumption.
2. Over load is monitored automatically.
3. Vehicle accidents detection is achieved automatically.
4. Location based ambulance is booked automatically.
5. Helmet wearing is detected automatically

VII. CONCLUSION

There are many accident identification cases. In our work, the exactness and accuracy are high, which demonstrates that our proposed system is precise in recognizing accidents by using the vibration, load monitoring, MEMEs and high alcohol consumption. The comparison of the parameters for accident detection shows the importance of the use of helmet.

REFERENCES

[1] SayanTapadar, Arnab Kumar Saha, Dr. Himadri Nath Saha, Shinjini Ray, "Accident and Alcohol Detection in Bluetooth enabled Smart Helmets for Motorbikes"978-1-5386-4649-6/18/$31.00 ©2018 IEEE.

[2] Ms. Rekha. M, Ms. Bharathi. K, Ms. Cynthia, "Drink and Drive Detection System" © 2014- 17, IJIRAE.

[3] P. THARANGAI THAMIL, S. VANITHA "Survey on Rash Driving Detection Using Acceleration and Orientation Sensors" ISSN 2278 – 0882 Volume 4, Issue 3, March 2015.

[4] Amrutha Madhusan, Lavanya Viswanathan, Vaishnavi Ravindran, Dr. ShantaRangaswamy," A survey on Road Accident Detection and Reporting" Volume 7, Issue 4, April-2016.

[5] C. Prabha, R.Sunitha , R.Anitha,"Automatic Vehicle Accident Detection and Messaging System Using GSM and GPS Modem", Vol. 3, Issue 7, July 2014 DOI: 10.15662/ijareeie.2014.0307062.

[6] Aboli Ravindra Wakure, Apurva Rajendra Patkar, Manisha VitthalDagale, Priyanka Pradeepkumar Solanki,"Vehicle Accident Detection and Reporting System Using GPS and GSM" Volume 10, Issue (April 2014), PP.25-28 [IJERD]

[7] Hemangi S. Ahire, Madhuri B. Kamble, Prajakta K. Khade, Rohini A. Ghare, Prof. B.V. Jadhav, "Vehicle Accident Detection and Alerting System", Volume 6 Issue I, January 2018.

[8] Akansha Rajputa, Amit Saxenaa, Achint Agarwalb, Aman Bhatiab and Aman Mishrab, "Smart Helmet with Rider Safety System, Volume 4, Issue 3, 2017[IJAERE]

[9] V.Krishna Chaitanya, K. Praveen Kumar, "Smart helmet using arduino", Hyderabad, 2013.

[10] SudharsanaVijayan, Vineed T Govind, Merin Mathews, SimnaSurendran, Muhammed Sabah," Alcohol detection using smart helmet system", IJETCSE, Volume 8 Issue 1 – APRIL 2014.

[11] Bhandari Prachi, Dalvi Kasturi," Intelligent Accident-Detection and Ambulance- Rescue System" VOLUME 3, ISSUE 6, JUNE 2014(IJSTR).

[12] Adnan Nasir, "Automatic Road Accident Detection Techniques: A Brief Survey" DOI: 10.1109/ISWSN.2017.8250025.

[13] Mohd Khairul Afiq Mohd Rasli, Nina KorlinaMadzhi, Juliana Johari,"Smart Helmet with Sensors for Accident Prevention" 2013(IEEE)

[14] B.Shyam Sundar, C.Velmurugan,"Smart phone based accident detection and rescue system Vol-3 Issue-2 2017, IJARIIE-ISSN(O) 2395-4396.

[15] Prajitha Prasad A, Reshma Mohan,"Smart Helmet and Intelligent Bike System", ISSN: 2393-8374, 2394-0697, VOLUME-5, ISSUE-5, 2018.

[16] Hemendra Kumar, Mohit Kumar, "Smart Helmet for Two-Wheeler Drivers",Volume. 02 Issue.05, May-2016.

[17] M. K. A. Mohd Rasli, N. K. Madzhi and J. Johari, "Smart helmet with sensors for accident prevention," 2013 (ICEESE), Kuala Lumpur,2013, pp.21-26. doi: 10.1109/ICEESE.2013.6895036.

[18] Yovan Felix A., Jesudoss A. and Albert Mayan J., "Entry and Exit Monitoring using License Plate Recognition", in Proc. International Conference on Smart Technologies and Management, 2017, pp. 227-231.

[19] Nitin Agarwal, Anshul Kumar Singh, Pushpendra Pratap Singh, Rajesh Sahani, "Smart Helmet" © 2015, IRJET.NET Volume: 02 Issue: 02 May 2015

[20] Pooja Dagade, Priyanka Salunke, SupriyaSalunke,Seema T. Patil, "Volume: 04 Issue: 05 | May -2017" (IJRET)

[21] Aravinda B, Deeksha, Ashutha K "Sensor based Accident Prevention" vol.4, Issue 6, June 2016 DOI 10.17148/IJIREEICE.2016.4603.

[22] Jesudoss A. and Subramaniam N.P., " Securing cloud-based healthcare information systems using enhanced password-based authentication scheme", Asian Journal of Information Technology, Vol. 15, Issue 14, 2016, pp. 2457-2463.